PEAK® RailBlazers®
ALUMINUM RAILING

Report Of:

- **2012 Ontario Building Code - Part 4**

WARNING No representation or warranty is given that your particular application of these products complies with relevant building codes or that the fasteners provided or used are appropriate for your application. Therefore consult with professionals and local building officials before beginning work: (i) to ensure compliance with relevant building codes for your application and for your proposed use of fasteners; (ii) to ensure the integrity of the structural components in connection with which these products are to be used; (iii) to identify appropriate safety gear that is to be used during installation such as a safety harness when working above ground; (iv) to ensure that the work area is free from utilities, services and hazards; and, (v) to clarify any instructions or warnings that may not be clear. Work in a safe manner wearing protective gear such as gloves, eyewear, headwear, footwear and clothing. When using tools always comply with operation manuals and instructions. Metal and glass may have sharp edges and could fragment or splinter during or as a result of handling or cutting. Do not use these products in connection with any substance that is or may be harmful or corrosive to the products. Inspect and maintain these products and the structural components that they are used in connection with on a regular basis using professionals when appropriate. These instructions have been prepared for certain standard residential applications. Obtain professional advice for any non-standard or non-residential application.

Peak® RailBlazers®Aluminum Railing System

Engineering Review for Compliance with Ontario Building Code Part 4

Peak Products Manufacturing Inc.
www.peakproducts.com

Submitted August 30, 2022 by
RDH Building Science Inc.
4333 Still Creek Drive #400
Burnaby BC V5C 6S6

Contents

Appendices

1 Overview

The Peak® RailBlazers® Aluminum Railing System is intended to act as a guard or barrier to protect the public from a fall. The objectives were to complete a structural review of the structural components based in Limit States Design, in accordance with applicable material standards and the Part 4 of the Ontario Building Code 2012 including updates to May 25, 2022.

The following specified loads apply:

- Concentrated load of 1 kN applied in any direction at any point along the top of guard.
- Uniformly distributed load of 0.75 kN/m applied in any direction along the top of guard.
- Uniformly distributed vertical load of 1.5 kN/m applied along the top of guard.
- Concentrated infill load of 0.5 kN applied anywhere within the guard.
- Uniform wind load per the limits shown in Appendix B Assembly Drawings

The following structural components were evaluated:

1.1 Infill Elements

- Aluminum pickets 38 mm (1½") wide - Dwg. Title "PEAK® RailBlazers® Railing Assembly with Wide Pickets"
- Glass panels 6mm thick tempered glass up to 1676 mm (66") wide – Dwg. Title "PEAK® RailBlazers® Railing Assembly with Glass Panel"

1.2 Rail Elements

- Post – Dwg. Title "Peak® Railblazers® Posts"
- Hand rail – See Report Assembly drawings
- Base rail – See Report Assembly drawings
- Stair hand rail – See Report Assembly drawings
- Stair base rail – See Report Assembly drawings

1.3 Connectors

- Horizontal angle brackets – Dwg. Title "Peak Railblazers® Brackets and Connectors"
- Wall mount brackets – Dwg. Title "Peak® Railblazers® Brackets and Connectors"
- Mid/stair/end fascia mount bracket – Dwg Title "Peak® Railblazers® Fascia Brackets"
- Corner fascia mount bracket – Dwg. Title "Peak® Railblazers® Fascia Brackets"
- Stair hand and base rail bracket – Dwg. Titles "Aluminum Railing – Stair Railing Assembly with Pickets" and "Aluminum Railing – Stair Railing Assembly with Wide Pickets"

The complete list of all components (including non-structural components) for the system is included in Appendix A.

2 Infill Elements

The primary infill elements include the following:

- Aluminum pickets 38 mm (1½") wide
- Glass panels of 6mm (1/4") thickness and up to 1676 mm (66") wide

This review is based on information and drawings provided by Peak Products Manufacturing Inc. (Peak) for the elements listed above.

2.1 Aluminum Infill Elements

Our analysis is based on the following information:

- Loads: Prescribed by the Ontario Building Code. See Section 1.0 Overview.
- Resistance: Completed in accordance with CAN/CSA S157-17, Strength Design in Aluminum.
- Section properties: Information was provided by Peak. Calculations were completed in accordance with CAN/CSA S157-17.
- Load configuration: Span and bearing lengths were provided by Peak.

2.2 Glass Infill Elements

Our analysis is based on the following information:

- Loads: Prescribed by the Canadian building codes. See Section 1.0 Overview.
- Resistance: Completed in accordance with ASTM E1300-16, Standard Practice for Determining Load Resistance of Glass in Buildings.
- Material: Tempered glass in accordance with ASTM E1300-16 per information and drawings provided by Peak.
- Section properties: Determined from drawings provided by Peak.

- Load configuration: Span and bearing lengths were provided by Peak.
- Allowable deflection: The allowable deflection was calculated based on preventing fall-out of the glass from frame.

3 Rail Elements

3.1 General Rail Elements

The general rail elements include the hand rail, stair hand rail, base rail, and posts. An analysis was completed based on the worst-case configuration for these elements.

- Loads: Prescribed by the Canadian building codes. See Section 1.0 Overview.
- Resistance: Completed in accordance with CAN/CSA S157-17, Strength Design in Aluminum.
- Section properties: Information was provided by Peak. Calculations were completed in accordance with CAN/CSA S157-17.
- Fastener resistance: Completed in accordance with CAN/CSA S16-2021, Design of Steel Structures.
- Load configuration: Span and dimensions were provided by Peak. Posts were modeled as cantilevers, fixed at the base. The results from our analysis show the maximum span that can be achieved, as calculated from the material and fastener resistances.

4 Connectors

4.1 General Connectors

The general connectors included the horizontal brackets, wall mount brackets, mid/stair/end fascia mount bracket, corner fascia mount bracket, and stair hand and base rail brackets. An analysis was completed based on the worst-case configuration for these elements.

- Loads: Prescribed by the Canadian building codes. See Section 1.0 Overview.
- Resistance: Completed in accordance with CAN/CSA S157-17, Strength Design in Aluminum and CAN/CSA S16-2021, Design of Steel Structures.
- Section properties: Information was provided by Peak. Calculations were completed in accordance with CAN/CSA S157-17.
- Load configuration: Span and dimensions were provided by Peak.
- Connections to the base building are included as part of this review, including but not limited to the rail and post connections.

5 Results

A full set of calculations and results is presented in RDH's compiled engineering review package. The engineering package includes:

- Dimensioned drawings of each component, including extrusion drawings.
- Calculation sheets for the structural capacity of components listed in 1.0 Overview.

The above documents contain proprietary information, and as such, have not been included in this report.

6 Conclusion

The Peak® RailBlazers® Aluminum Railing System meets the requirements within Part 4 of the Ontario Building Code 2012 including updates to May 25, 2022. Limitations of compliance are defined in the assembly drawings presented in Appendix B.

Yours truly,

Jeffrey Wong | BASc, PE (WA)
Facade Structural Consultant
jmwong@rdh.com
RDH Building Science Inc.

Reviewed by
David Vadocz
Principal
Façade Structural Specialist
dvadocz@rdh.com
RDH Building Science Inc.

Encl. Appendix A – List of Components

Appendix B – Assembly Drawings

Limits of Commission

This report was prepared for Peak. It is not for the use or benefit of, nor may it be relied upon, by any other person or entity, without written permission of RDH Building Science Inc.

Appendix A

List of Components

SKU (White)	SKU (Matte Black)	Description
91000	91001	END POST
91010	91011	MID POST
91020	91021	CORNER POST
91050	91051	STAIR POST
91100	91101	4' HAND AND BASE RAIL
91110	91111	6' HAND AND BASE RAIL
91300	91301	4' WIDE PICKET AND SPACER
91310	91311	6' WIDE PICKET AND SPACER
91320	91321	6' STAIR RAILING KIT WITH WIDE PICKETS
91920	91921	WALL BRACKET
91930	91931	STAIR BRACKET
90940	90940	6' GLASS GASKET
91950	91951	HORIZONTAL ANGLE BRACKET
91960	91961	CORNER FASCIA BRACKET
91970	91971	MID/END/STAIR FASCIA BRACKET
10820	10820	GLASS PANEL 18 X 36 5/16
10823	10823	GLASS PANEL 21 X 36 5/16
10830	10830	GLASS PANEL 24 X 36 5/16
10833	10833	GLASS PANEL 27 X 36 5/16
10840	10840	GLASS PANEL 30 X 36 5/16
10843	10843	GLASS PANEL 33 X 36 5/16
10850	10850	GLASS PANEL 36 X 36 5/16
10853	10853	GLASS PANEL 39 X 36 5/16
90860	90860	GLASS PANEL 42 X 36 5/16
10863	10863	GLASS PANEL 45 X 36 5/16
10870	10870	GLASS PANEL 48 X 36 5/16
10873	10873	GLASS PANEL 51 X 36 5/16
10880	10880	GLASS PANEL 54 X 36 5/16
10883	10883	GLASS PANEL 57 X 36 5/16
10888	10888	GLASS PANEL 60 X 36 5/16
10891	10891	GLASS PANEL 63 X 36 5/16
90895	90895	GLASS PANEL 66 X 36 5/16

Appendix B

Assembly Drawings

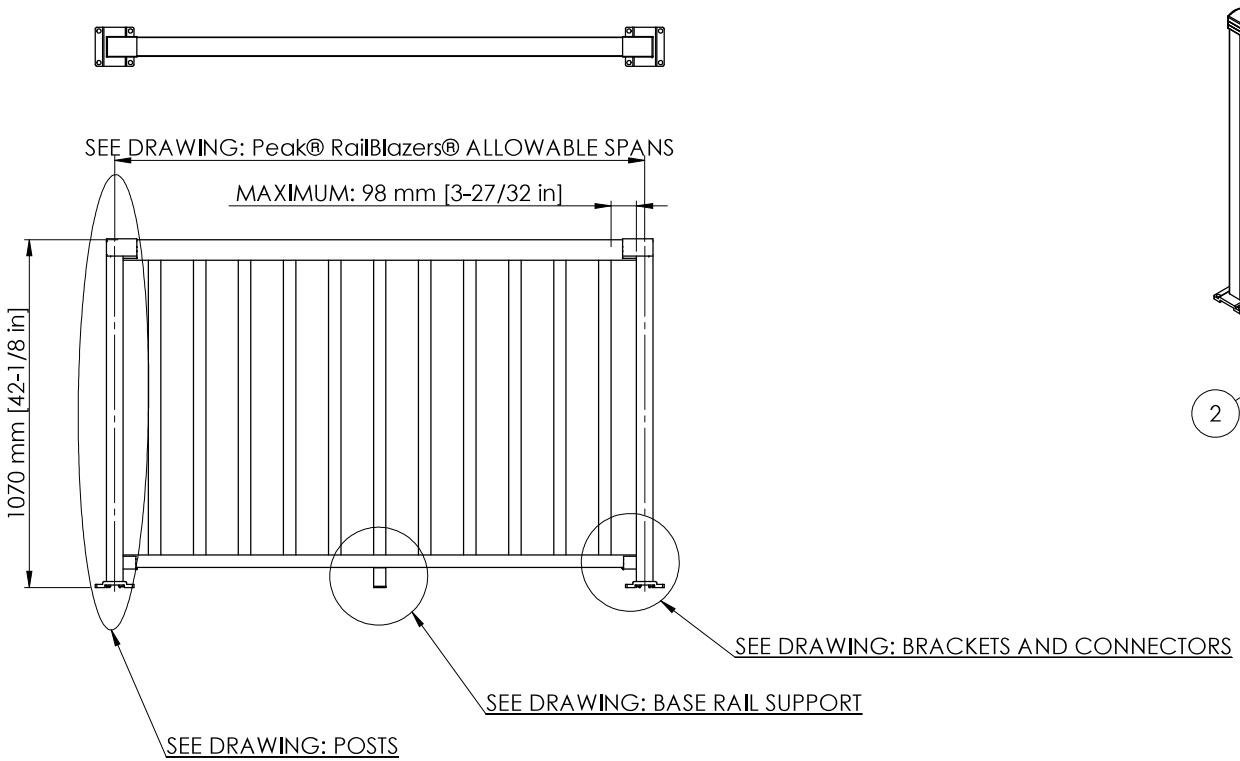

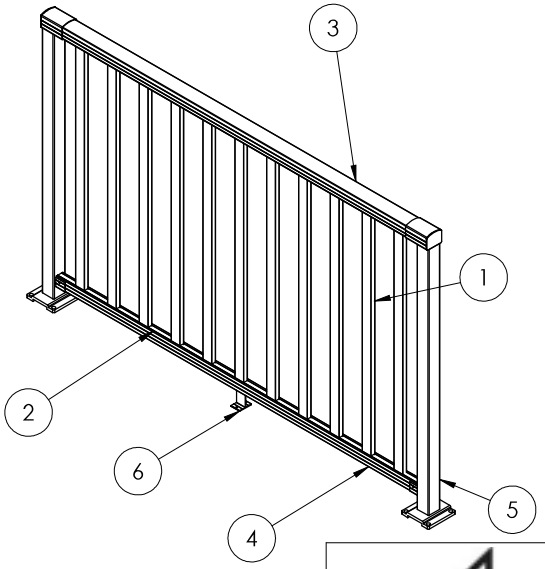

ITEM NO.	DESCRIPTION	SKU
1	WIDE PICKET	91350, 91351
2	SPACER (98 mm)	91350, 91351
3	HAND RAIL	91100, 91101, 91110, 91111
4	BASE RAIL	91100, 91101, 91110, 91111
5	POST	91000, 91001, 91010, 91011, 91020, 91021, 91050, 91051
6	BASE RAIL SUPPORT	91100, 91101, 91110, 91111

TITLE
Peak® RailBlazers® - Railing Assembly with Wide Pickets

PART FILE
Report assembly P4 64in- wide pickets -ExtBase

DWG REV
A

DIMENSIONS ARE IN MM UNLESS NOTED
DO NOT SCALE DRAWING

SIZE B
DWG. NO. Report assembly P4 Assembly Wide Pickets - 91XXX

SCALE: 1:15
SHT REV 2017-05-16

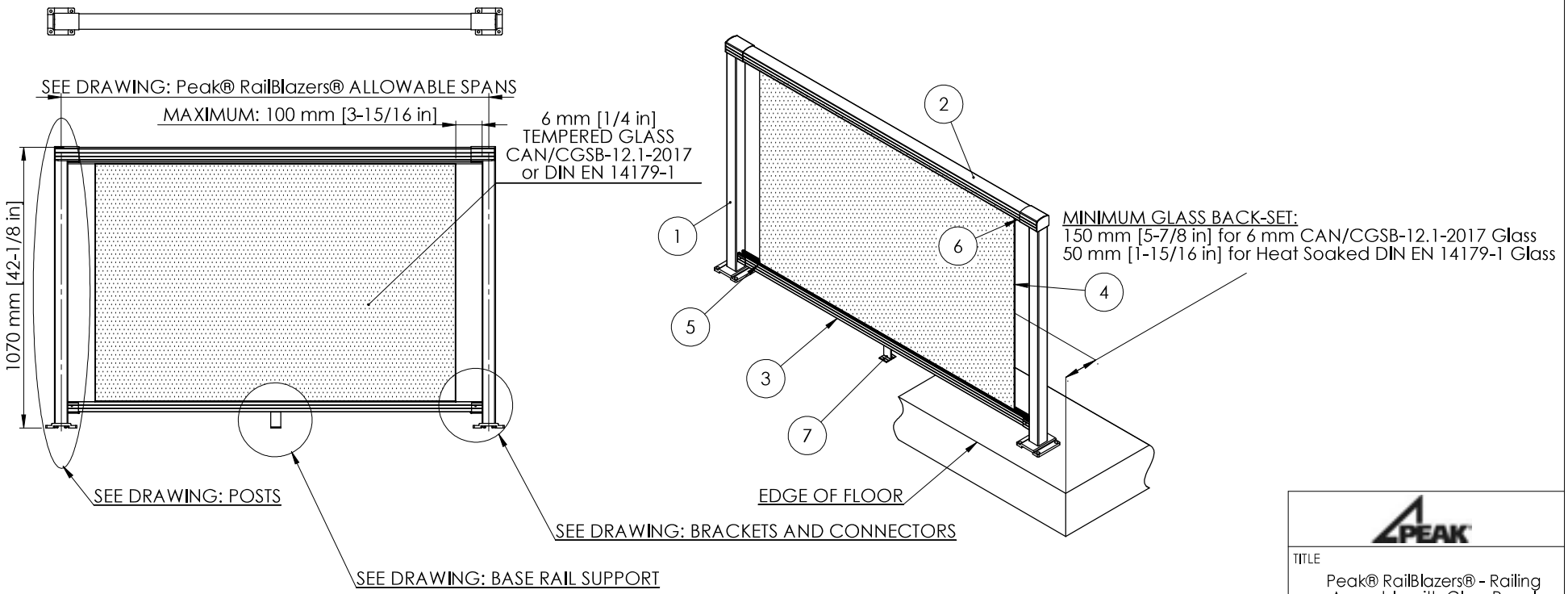

ITEM NO.	DESCRIPTION	SKU
1	POST	91000, 91001, 91010, 91011, 91020, 91021, 91050, 91051
2	HAND RAIL	91100, 91101, 91110, 91111
3	BASE RAIL	91100, 91101, 91110, 91111
4	GLASS PANEL	10820, 10823, 10830, 10833, 10840, 10843, 10850, 10853, 90860, 10863, 10866, 10870 ,10873, 10880, 10883, 10888, 10891, 90895
5	LOWER GLASS GASKET	90940
6	UPPER GLASS GASKET	90940
7	BASE RAIL SUPPORT	91100, 91101, 91110, 91111

PEAK

TITLE
Peak® RailBlazers® - Railing Assembly with Glass Panel

PART FILE
Report assembly P4 - 64in span-glass panel - ExtBase

DWG REV
A

DIMENSIONS ARE IN MM UNLESS NOTED
DO NOT SCALE DRAWING

SIZE
B

DWG. NO.
Report assembly P4 Assembly Glass Panel ON -91XXX

SCALE: 1:15

SHT REV
2017-05-16

42 in GLASS PANEL

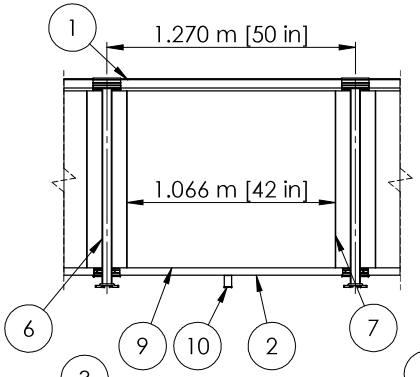

42 in GLASS PANEL AND TWO WIDE PICKETS EACH SECTION

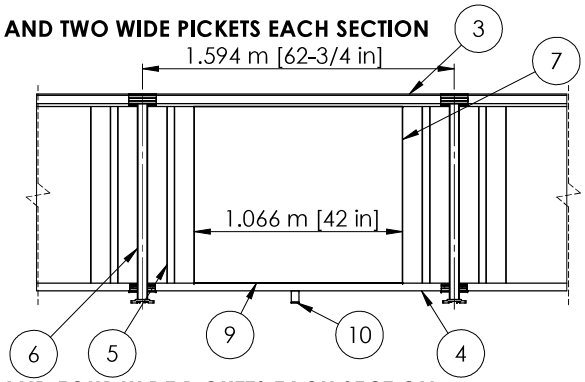

57 in GLASS PANEL

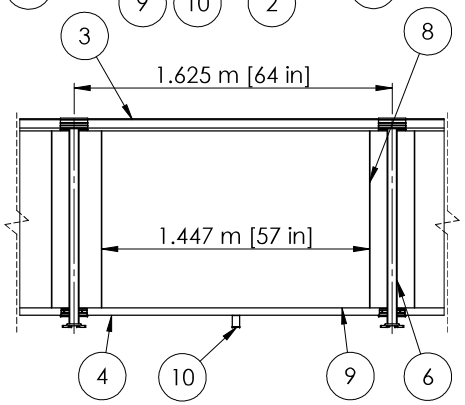

42 in GLASS PANEL AND FOUR WIDE PICKETS EACH SECTION

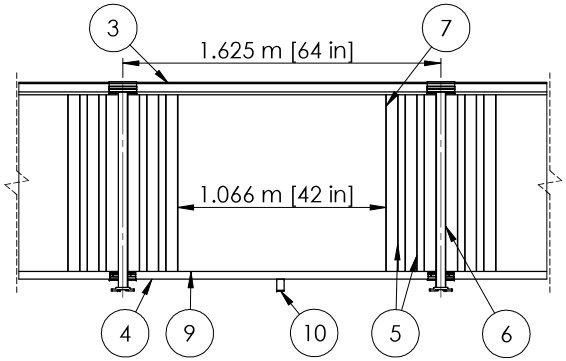

ITEM NO.	DESCRIPTION	SKU
1	HAND RAIL 4 FT	91100, 91101
2	BASE RAIL 4 FT	91100, 91101
3	HAND RAIL 6 FT	91110, 91111
4	BASE RAIL 6 FT	91110, 91111
5	WIDE PICKET	91350, 91351
6	POST	91000, 91001, 91010, 91011, 91020, 91021, 91050, 91051
7	GLASS PANEL 42 IN	90860
8	GLASS PANEL 57 IN	10880
9	GLASS GASKET	90940
10	BASE RAIL SUPPORT	91100, 91101, 91110, 91111

TITLE
Peak® RailBlazers® - Glass Panel Configuration Examples

PART FILE
Report assembly P4 50in repeating glass panel -ExtBase

DWG REV
A

DIMENSIONS ARE IN MM UNLESS NOTED
DO NOT SCALE DRAWING

SIZE B
DWG. NO.
Report assembly P4 Glass Examples -91XXX

SCALE: 1:25
SHT REV
2017-05-16

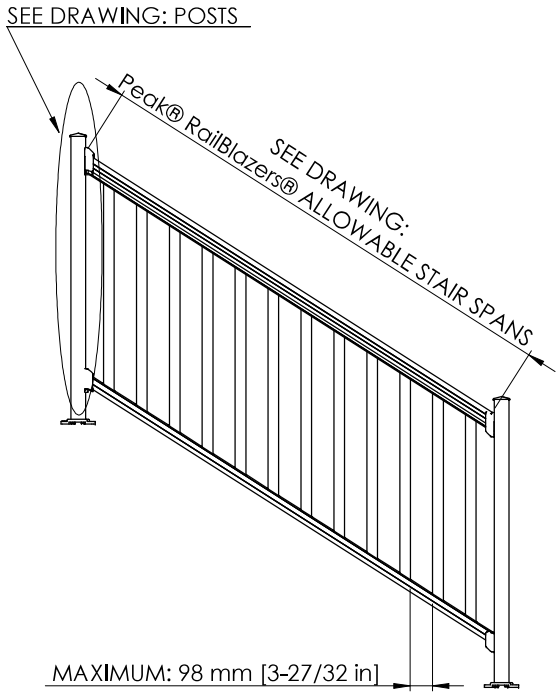

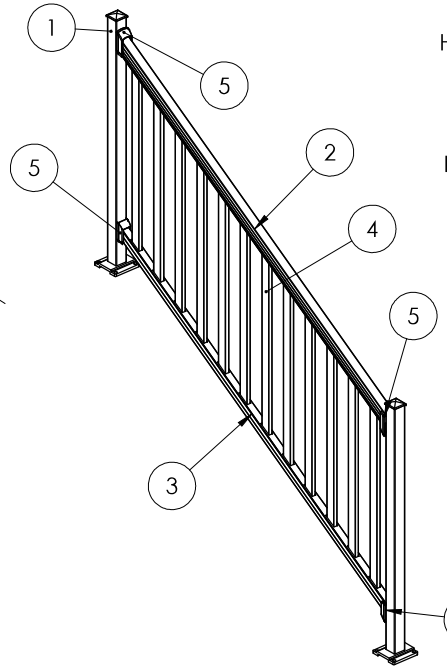

UPPER BRACKET MOUNTING TEMPLATE

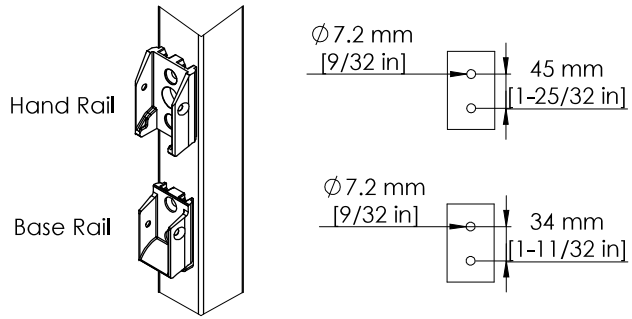

LOWER BRACKET MOUNTING TEMPLATE

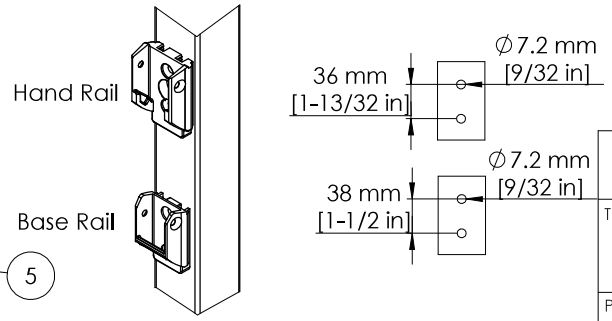

ITEM NO.	DESCRIPTION	SKU
1	POST	91000, 91001, 91050, 91051
2	HAND RAIL	91320, 91321
3	BASE RAIL	91320, 91321
4	WIDE STAIR PICKET	91320, 91321
5	STAIR BRACKETS	91320, 91321, 91930, 91931

PEAK

TITLE
Peak® RailBlazers® - Stair Railing with Wide Pickets

PART FILE
91XXX Stairs

DWG REV
A

DIMENSIONS ARE IN MM UNLESS NOTED
DO NOT SCALE DRAWING

SIZE B
DWG. NO.
Report assembly P4 Stair WIDE Pickets - 91XXX

SCALE: 1:15
SHT REV
2017-05-16

SINGLE RAILING PICKET SECTION

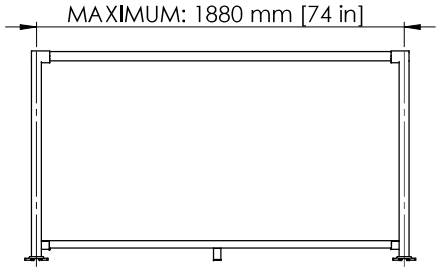

WALL MOUNT PICKET SECTION

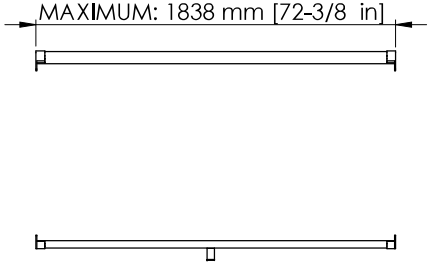

MULTIPLE RAILING PICKET SECTIONS

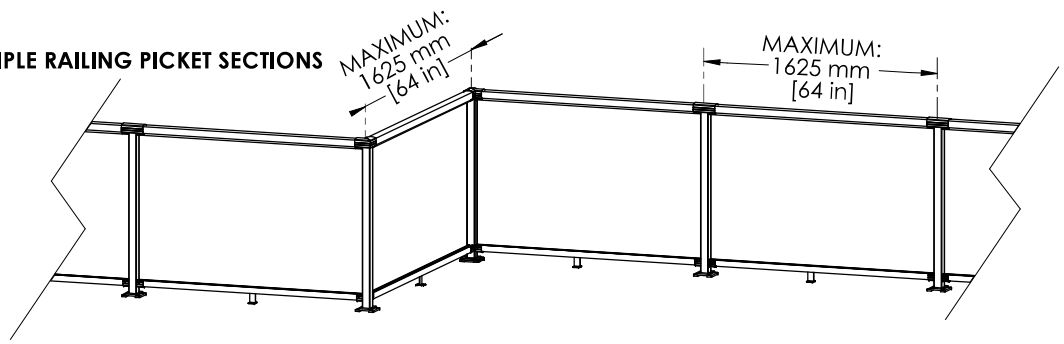

ALLOWABLE SPANS* 6 in GLASS PANELS AND GLASS PANELS UP TO 1.676 m [66 in]

Wind Load	Live Load	Maximum Wall Mount Single Span	Maximum Post Spacing	
			Single Section	Multiple Section
≤ 0.2 kPa (low exposure area)	0.75 kN/m	1.838 m [72-3/8 in]	1.880 m [74 in]	1.625 m [64 in]
≤ 0.67 kPa (low-rise)	0.75 kN/m	1.838 m [72-3/8 in]	1.880 m [74 in]	1.524 m [60 in]
≤ 0.97 kPa (high-rise)	0.75 kN/m	1.838 m [72-3/8 in]	1.880 m [74 in]	1.422 m [56 in]
≤ 1.15 kPa (high-exposure area)	1 kN	1.838 m [72-3/8 in]	1.880 m [74 in]	1.321 m [52 in]

*Note: The above wind loads provided are guidelines for typical building types for a q50 = 0.48kPa in rough terrain. Actual wind loads must be determined by a professional engineer for the intended location.

TITLE
Peak® RailBlazers® - Allowable Spans

PART FILE
Report assembly P4 Span 74in -ExtBase

DWG REV
A

DIMENSIONS ARE IN MM UNLESS NOTED
DO NOT SCALE DRAWING

SIZE B
DWG. NO. Report assembly P4 Allowable Spans -91XXX
SCALE: 1:20
SHT REV 2017-05-16

L-SHAPED CORNER SECTION: END POST

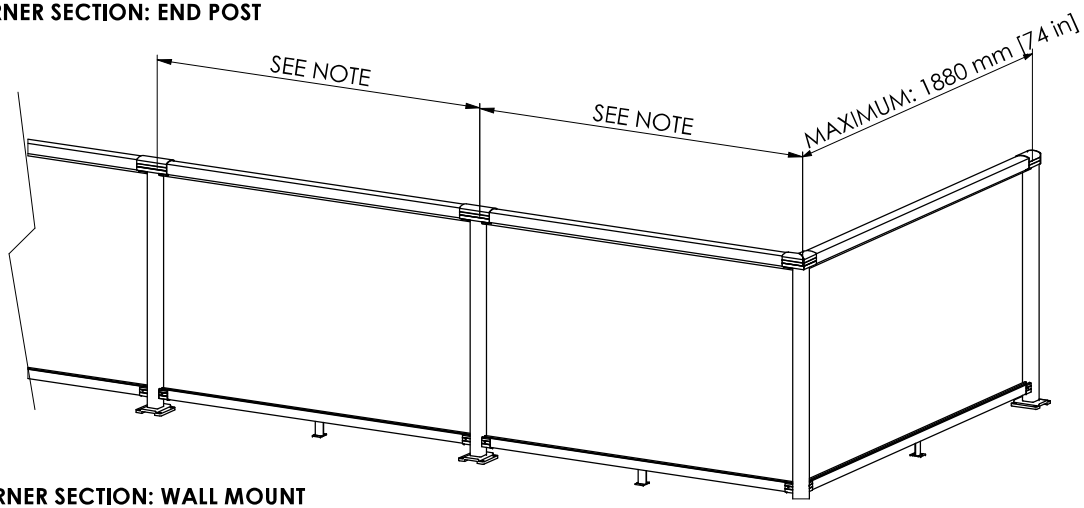

L-SHAPED CORNER SECTION: WALL MOUNT

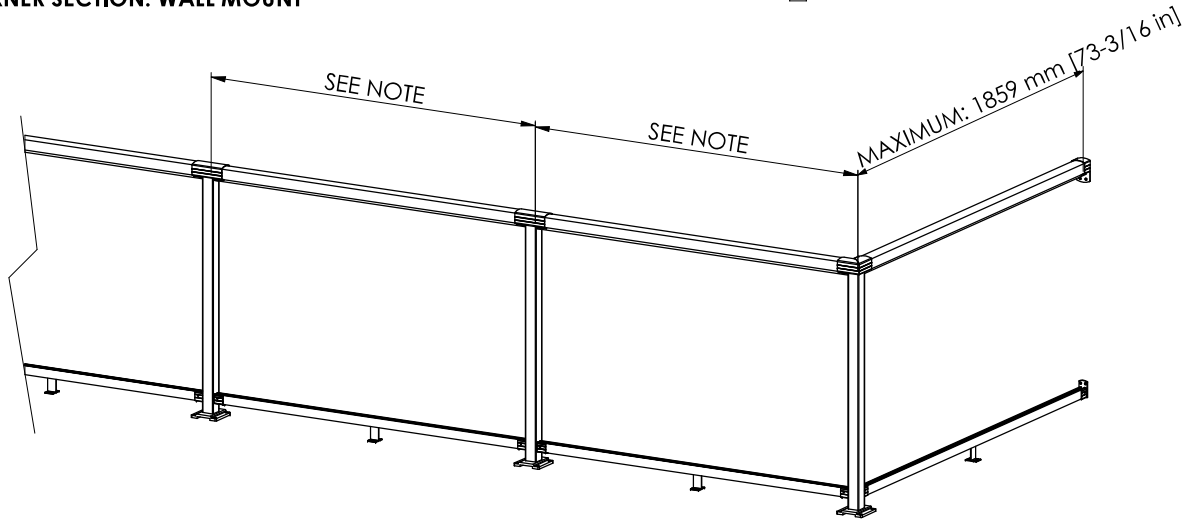

NOTE: Refer to drawing "ALLOWABLE SPANS" for multiple railing section allowable spans.

PEAK

TITLE
Peak® Railblazers® - Allowable Spans - Multiple Spans with Single Return

PART FILE
PEAK RAILBLAZER - RETURN

DWG REV
A

DIMENSIONS ARE IN MM UNLESS NOTED
DO NOT SCALE DRAWING

SIZE **B**
DWG. NO.
Report assembly P4 L-Return -91XXX

SCALE: 1:20
SHT REV
2017-05-16

MULTIPLE STAIR RAILING SECTIONS

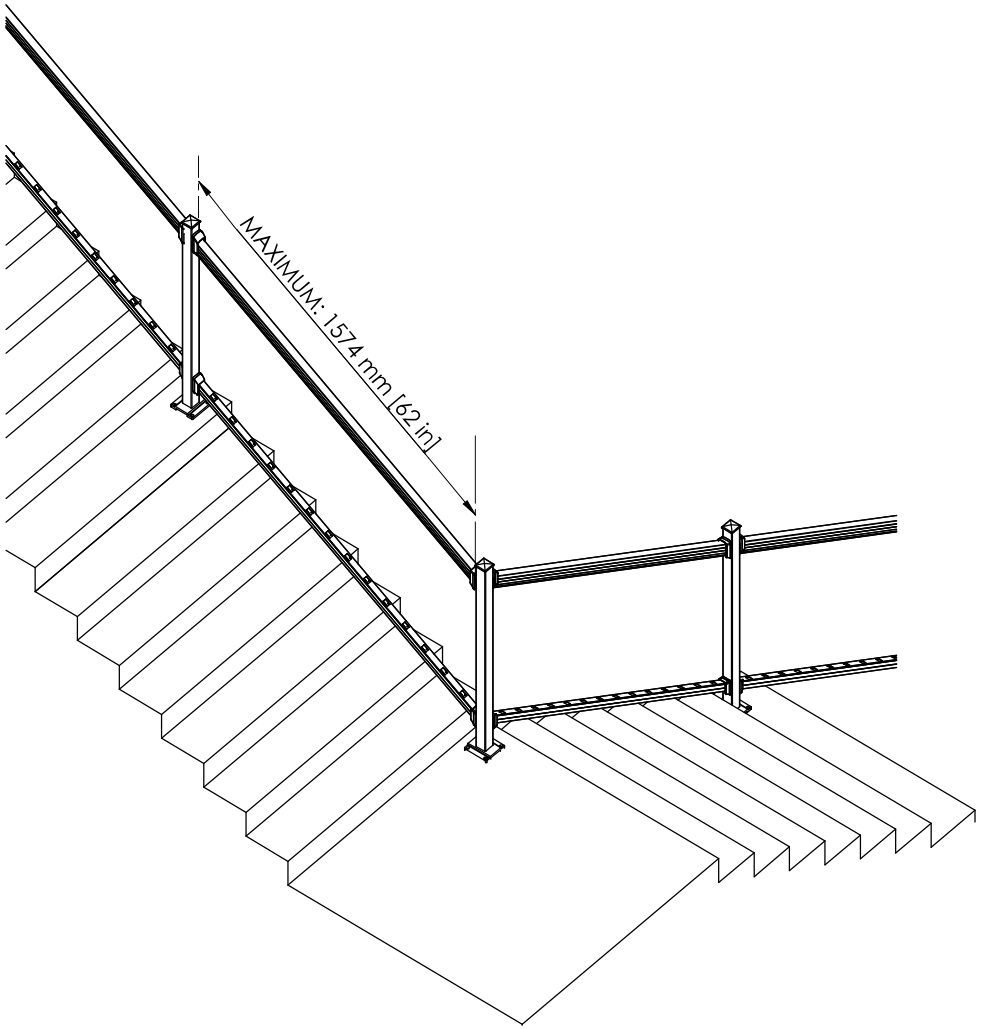

SINGLE STAIR RAILING SECTION

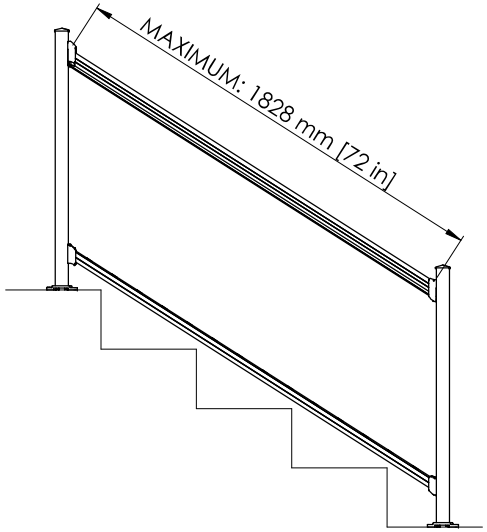

TITLE
Peak® RailBlazers®
Allowable Stair Spans

PART FILE
Report assembly - stair span single

DWG REV
A

DIMENSIONS ARE IN MM UNLESS NOTED
DO NOT SCALE DRAWING

SIZE **B**
DWG. NO.
Report assembly P4 Stair Span -91XXX

SCALE: 1:20
SHT REV
2017-05-16

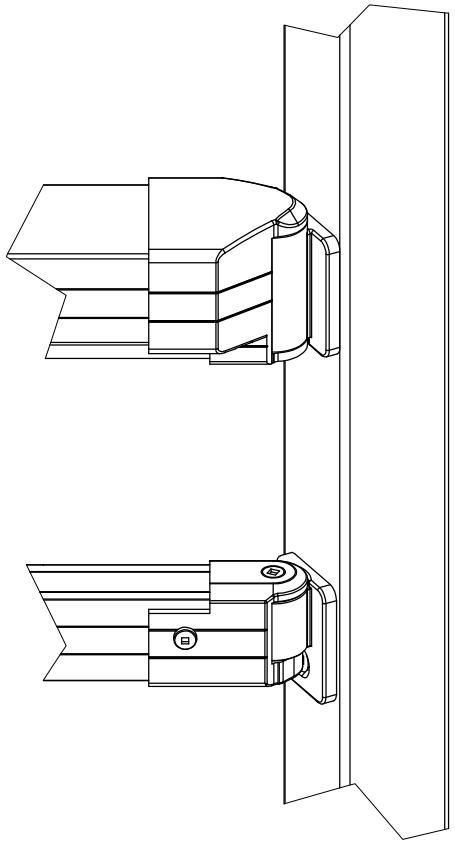

MOUNTING TEMPLATE:

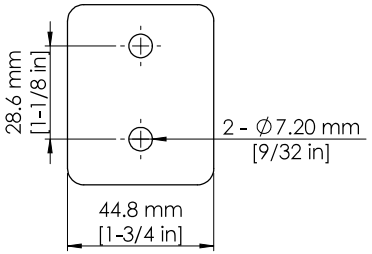

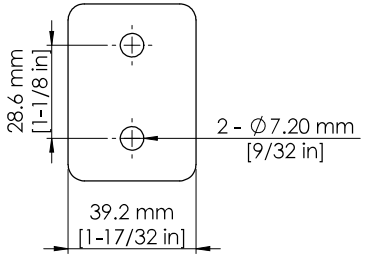

HORIZONTAL ANGLE BRACKET
SKU: 91950, 91951

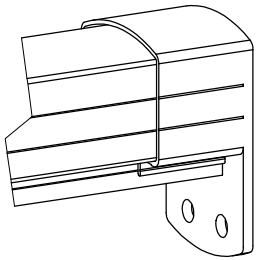

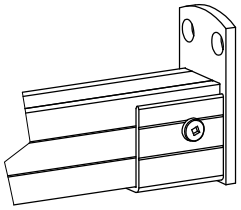

MOUNTING TEMPLATE:

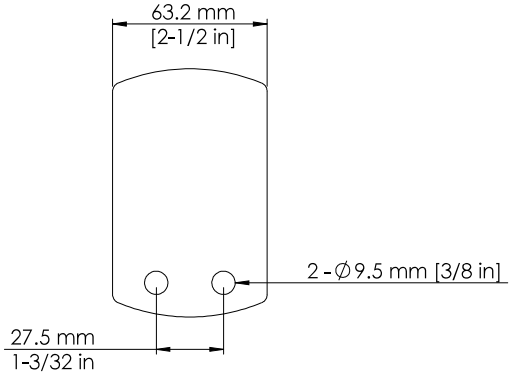

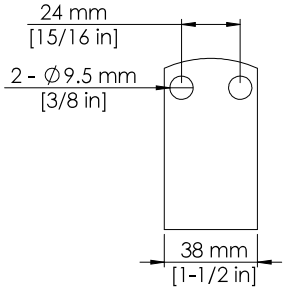

WALL MOUNT BRACKETS
SKU: 91920, 91921

TITLE
Peak® Railblazers®
BRACKETS AND CONNECTORS

PART FILE
fig-wall-brackets

DWG REV
C

DIMENSIONS ARE IN MM UNLESS NOTED
DO NOT SCALE DRAWING

SIZE
B

DWG. NO.
Report-brackets - PKRB-CAN
(6HW)

SCALE: 1:2

SHT REV
2017-05-16

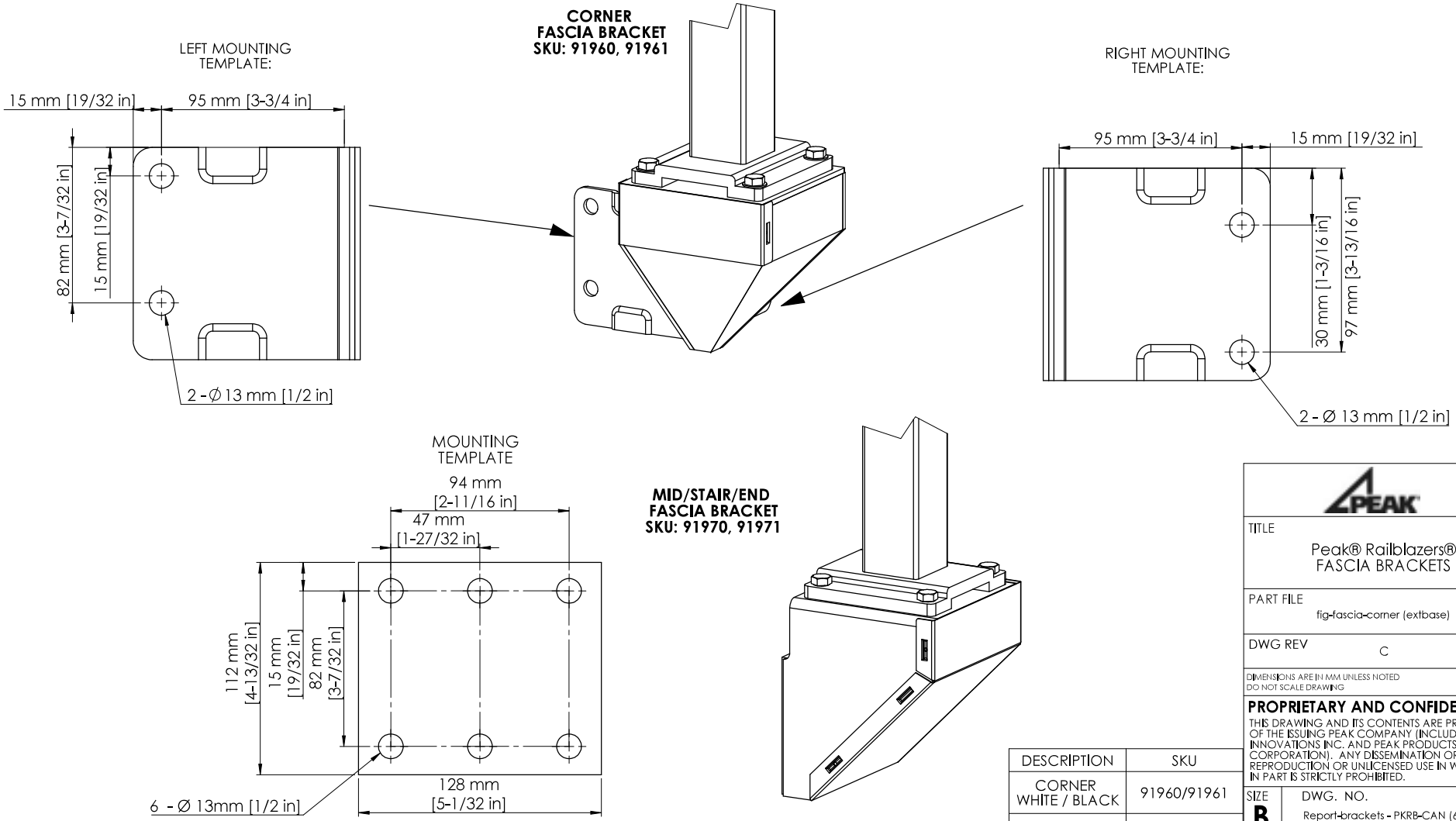

DESCRIPTION	SKU
CORNER WHITE / BLACK	91960/91961
MID/STAIR/END WHITE/BLACK	91970/91971

PEAK

TITLE
Peak® Railblazers® FASCIA BRACKETS

PART FILE
fig-fascia-corner (extbase)

DWG REV C

DIMENSIONS ARE IN MM UNLESS NOTED
DO NOT SCALE DRAWING

SIZE B
DWG. NO. Report-brackets - PKRB-CAN (6HW)
SCALE: 1:3
SHT REV 2017-05-16

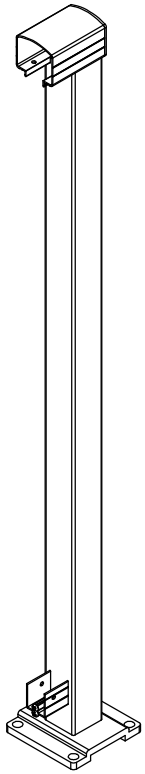

END POST

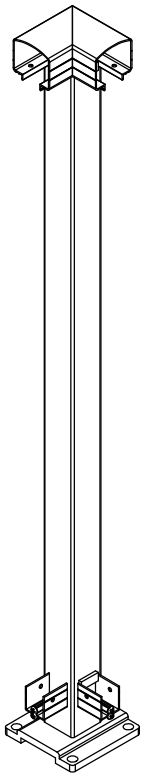

CORNER POST

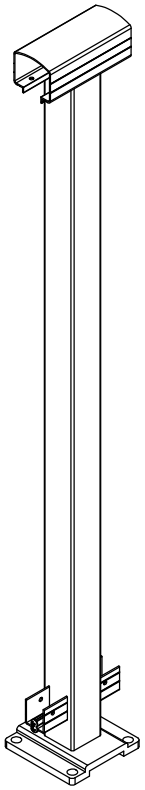

MID POST

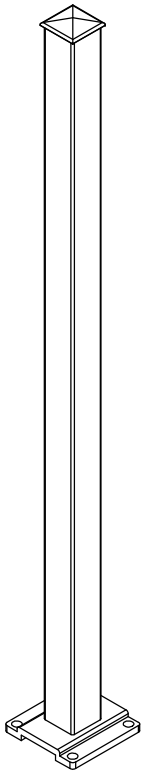

STAIR POST

MOUNTING TEMPLATE

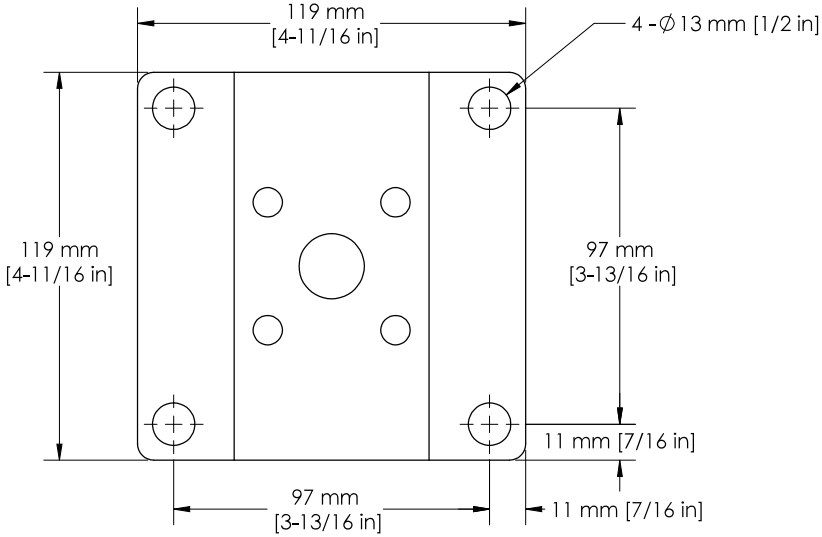

DESCRIPTION	SKU
END POST	91000, 91001
MID POST	91010, 91011
CORNER POST	91020, 91021
STAIR POST	91050, 91051

PEAK

TITLE
Peak® Railbazers® Posts

PART FILE
post-Base_10mm

DWG REV
B

DIMENSIONS ARE IN MM UNLESS NOTED
DO NOT SCALE DRAWING

SIZE B
DWG. NO.
Report Posts CAN P9 - ExtBase

SCALE: 1:8
SHT REV
2017-05-16

DECK MOUNT BASE RAIL SUPPORT

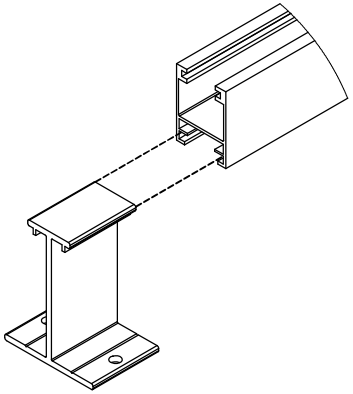

FASCIA MOUNT BASE RAIL SUPPORT

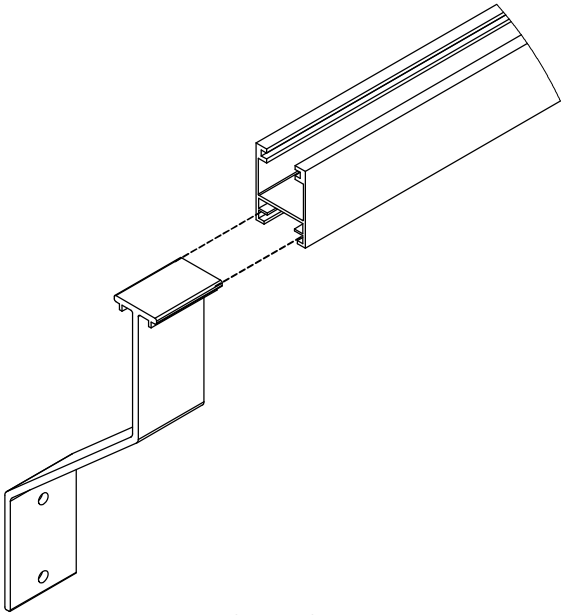

NOTE: The bottom rail support was not evaluated as a structural component necessary to resist the loads stated in Section 1.0 of this report. It does not form part of the structural system of the guard assembly.

MOUNTING TEMPLATE:

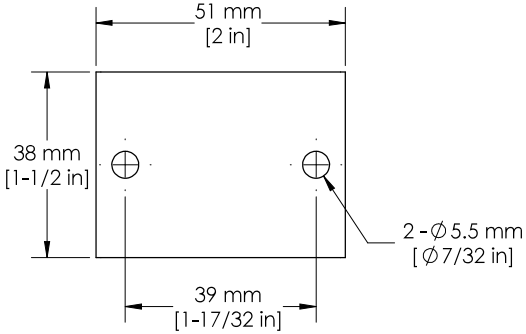

MOUNTING TEMPLATE:

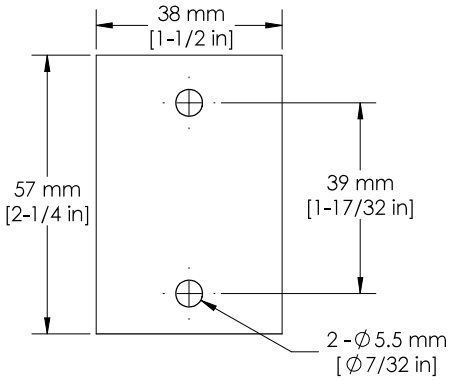

TITLE	Peak® RailBlazers® BASE RAIL SUPPORT
PART FILE	Report assembly - base rail support
DWG REV	B
DIMENSIONS ARE IN MM UNLESS NOTED DO NOT SCALE DRAWING	

SIZE	DWG. NO.	
B	BASE RAIL SUPPORT CA -91XXX	
SCALE: 1:1	SHT REV 2017-05-16	